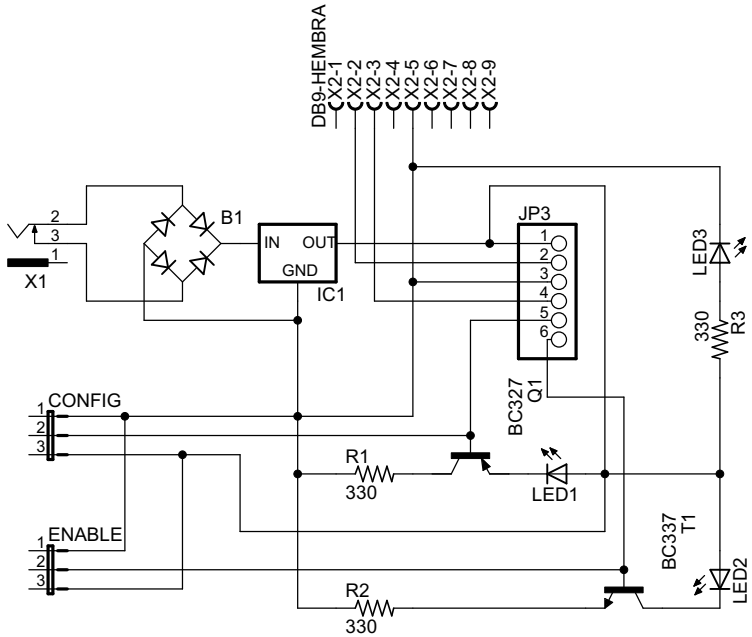

Punto Flotante, S.A. de C.V.

TITLE: Interface PC	
Document Number:	REV:
Date: 05/07/2010 12:30:44 a.m.	Sheet: 1/1