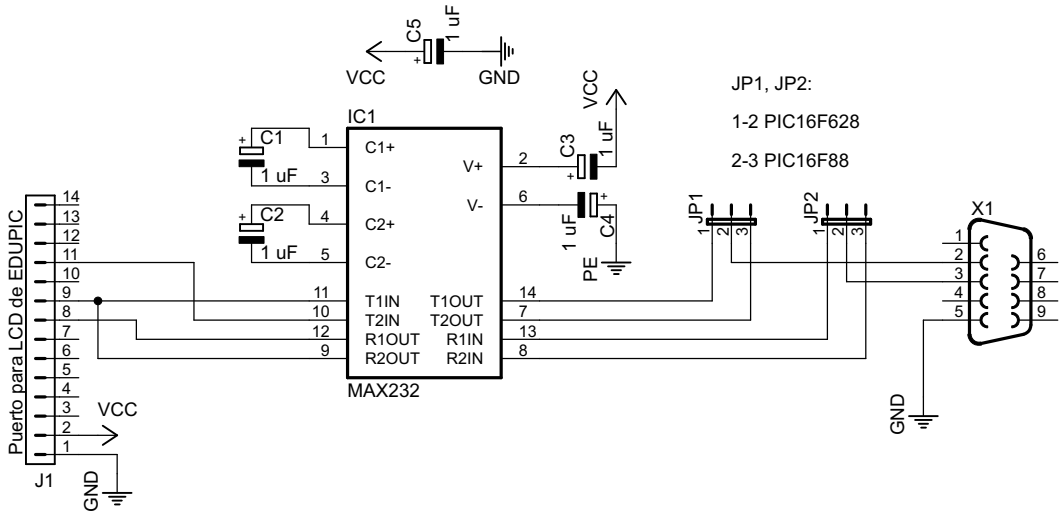

TITLE: INTERFAZ DB9-RS232 PARA EDUPIC	
Document Number:	REV:
Date: 23/02/2010 07:43:29 p.m.	Sheet: 1/1